Spare parts for: Wall-hung WCs TurboFlush (Geberit iCon) 2025 -

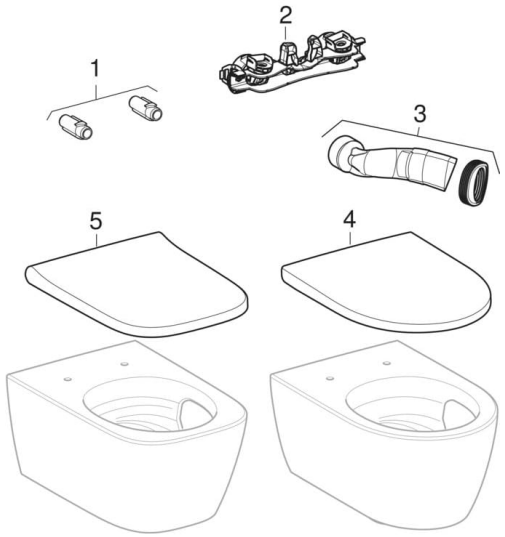

BRAND

Geberit

SERIES

iCon, iCon Square

CHARACTERISTICS

Year of manufacture from	2025

INFO

- Only the listed articles are available

#	Art. no.	Description	Remarks
1	**243.979.00.1**	Geberit Long nut for bayonet drive for wall-hung WC type EFF3	
2	**246.002.00.1**	Geberit mounting support for wall-hung WC, TurboFlush: white	

#	Art. no.	Description	Remarks
3	**246.107.00.1**	Geberit flush bend for WC TurboFlush	
4	**501.660.01.1**	Geberit iCon WC seat, EasyMount: Soft-closing mechanism=yes, Quick release=Yes, with lockable QuickRelease hinges, Fastening=from above, white / glossy	
4	**SPT_1771678**	WC seats for WC seat rings, EasyMount (Geberit Acanto, iCon, Bambini)	
4	**245.464.JT.1**	Geberit iCon WC seat, EasyMount: Soft-closing mechanism=yes, Quick release=Yes, with lockable QuickRelease hinges, Fastening=from above, white / matt	Only for 503.046.JT.1, 503.049.JT.1

VALID FOR ARTICLES

- 503.044.00.1
- 503.046.JT.1
- 503.046.00.1
- 503.045.00.1