EURODISC COSMOPOLITAN
DESIGN + ENGINEERING
GROHE GERMANY

99.1052.031/ÄM 248279/07.20

www.grohe.com

Pure Freude an Wasser

GROHE

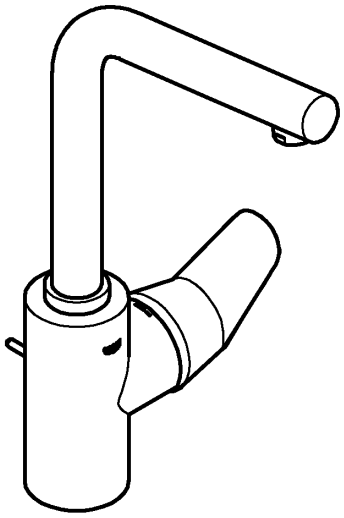

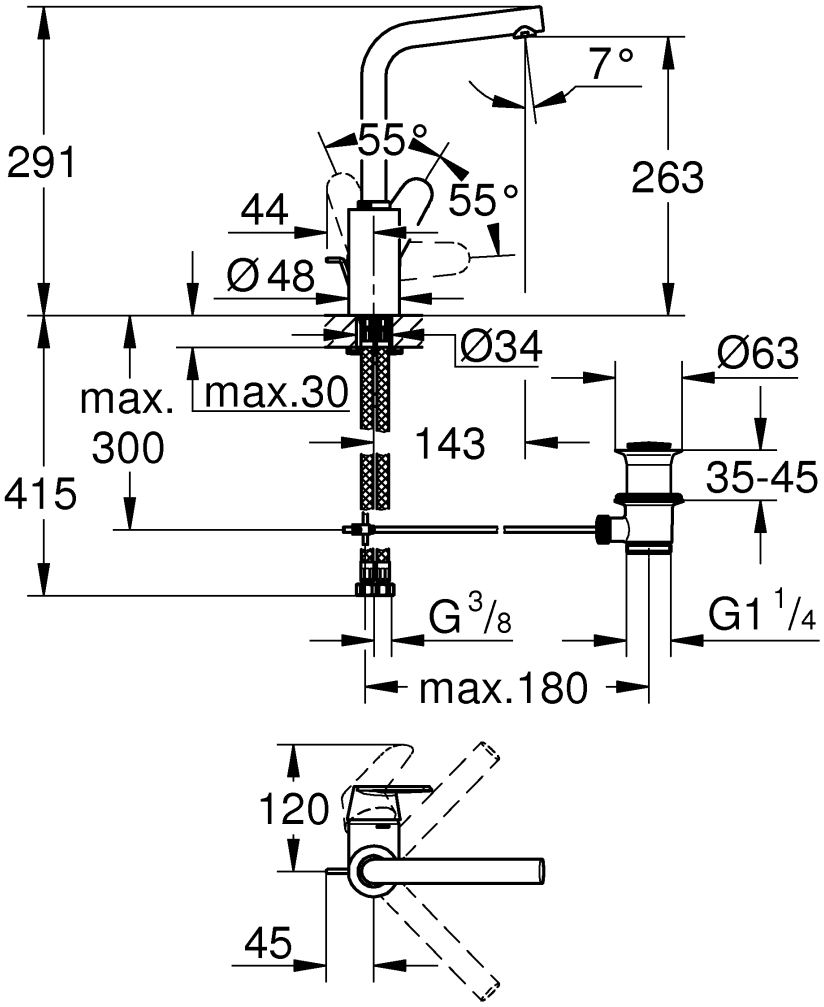

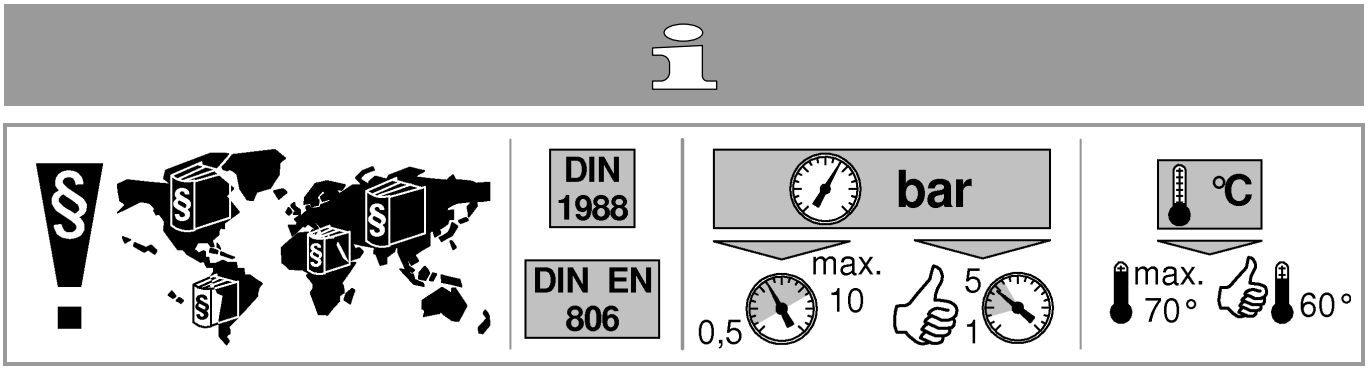
DIN 1988
DIN EN 806
bar
max. 10
0,5
5
1
°C
max. 70°
60°

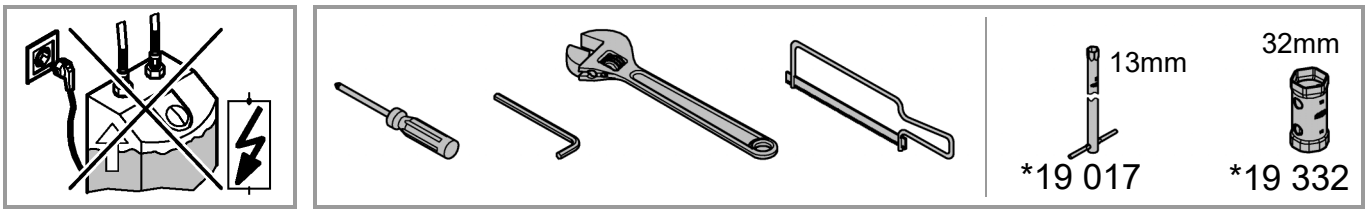
13mm
32mm
*19 017
*19 332

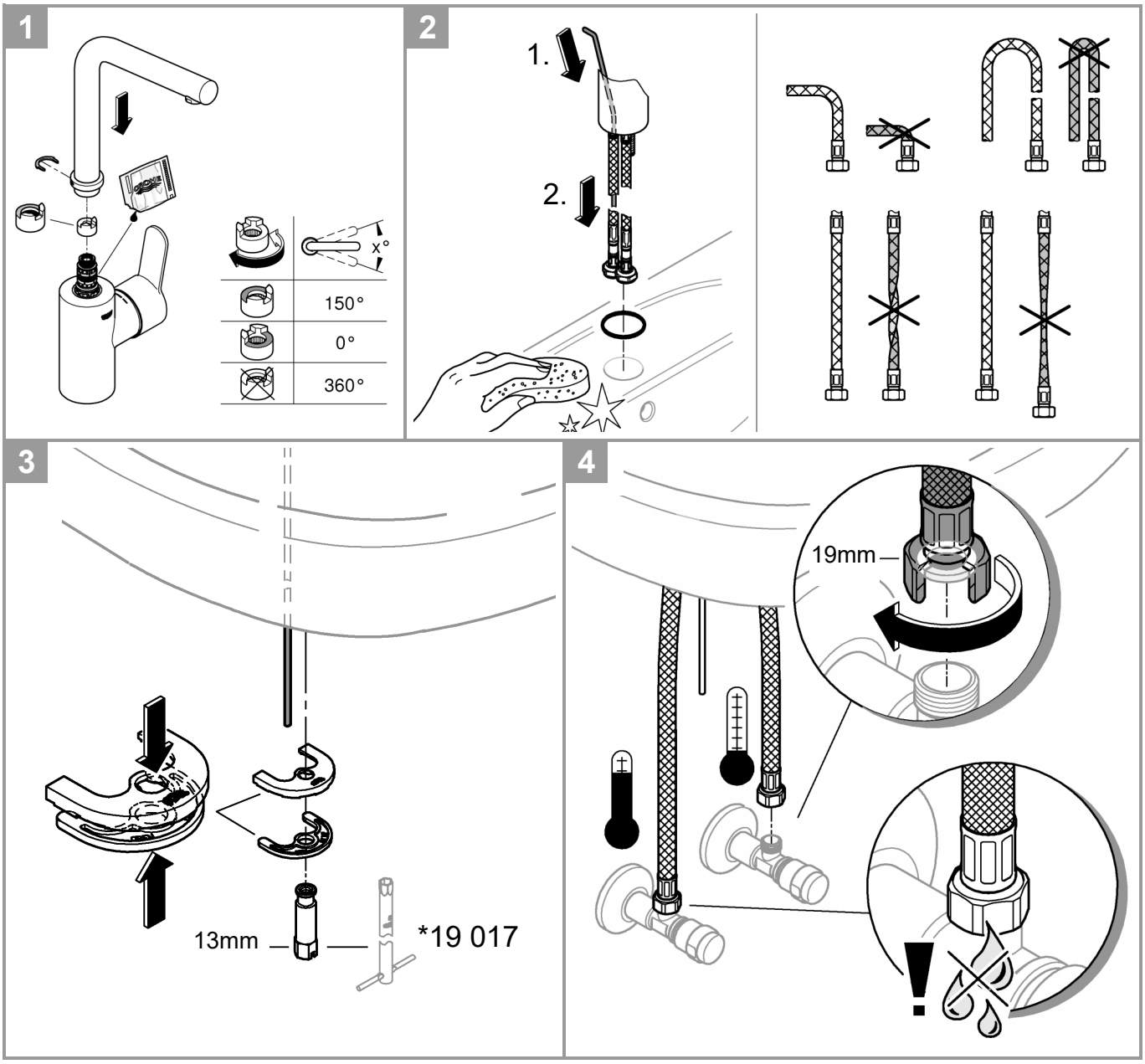
1
x°
150°
0°
360°
2
1.
2.
3
13mm
*19 017
4
19mm

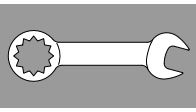

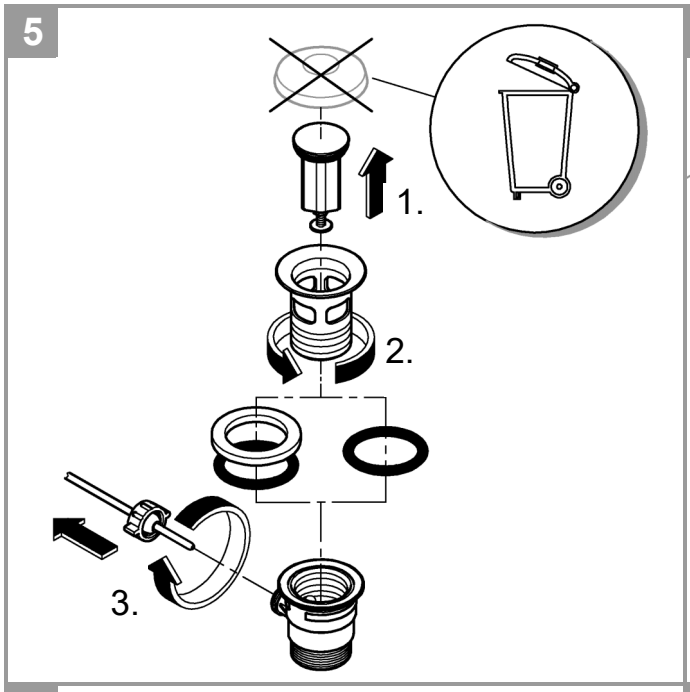
5
1.
2.
3.

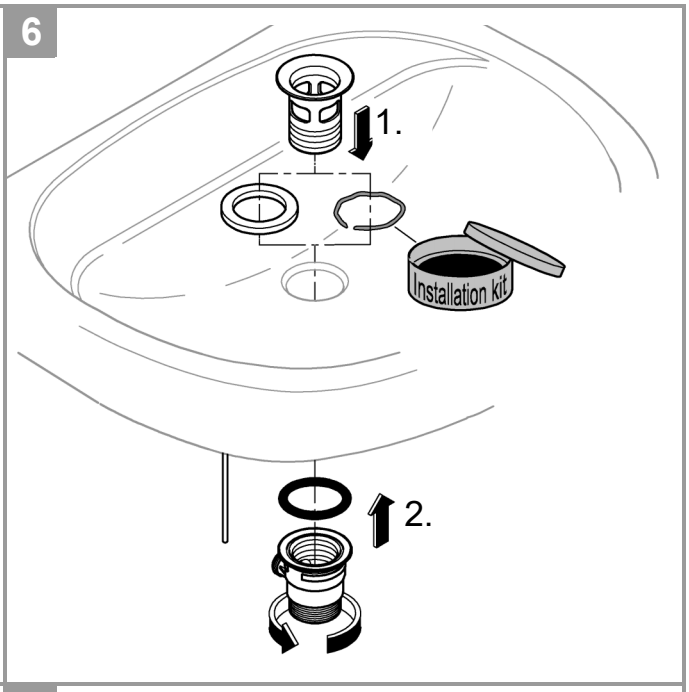
6
1.
Installation kit
2.

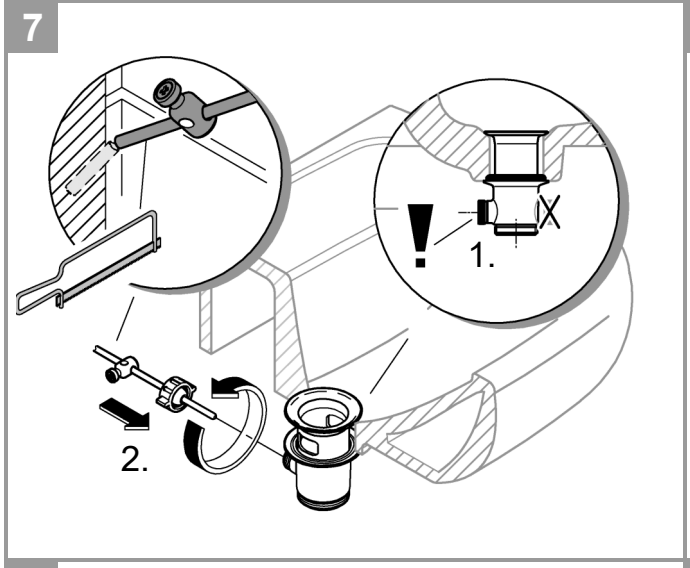
7
!
X
1.
2.

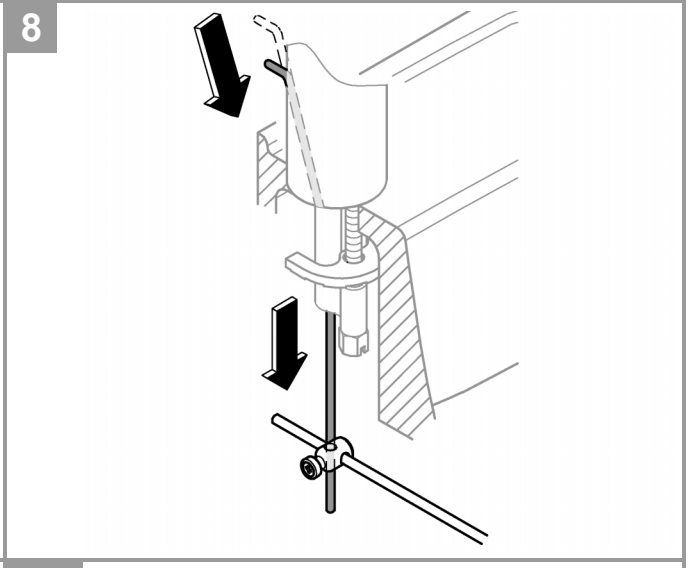
8

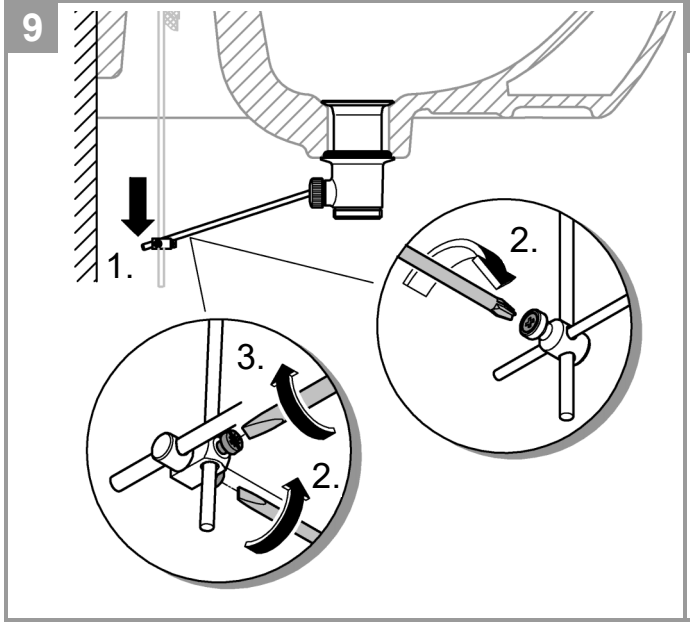
9
1.
2.
3.
2.

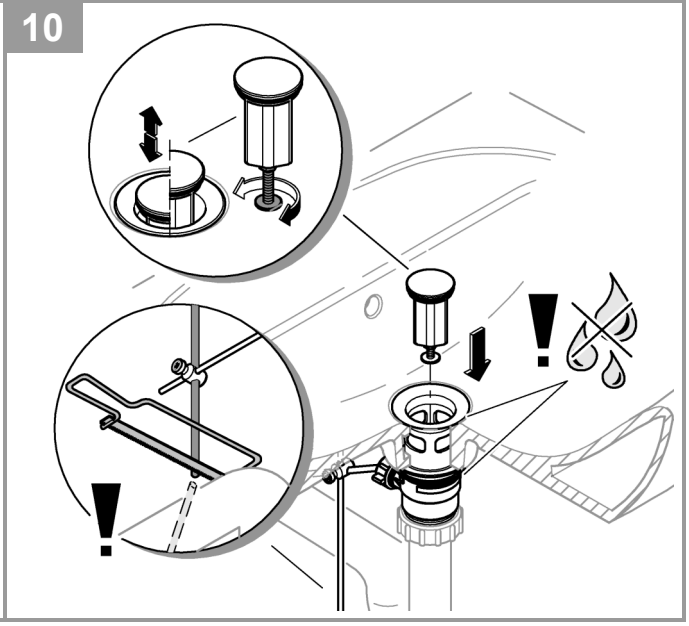
10
!
!

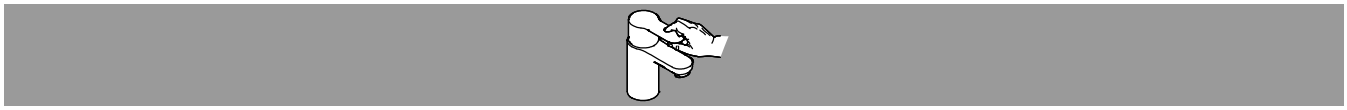

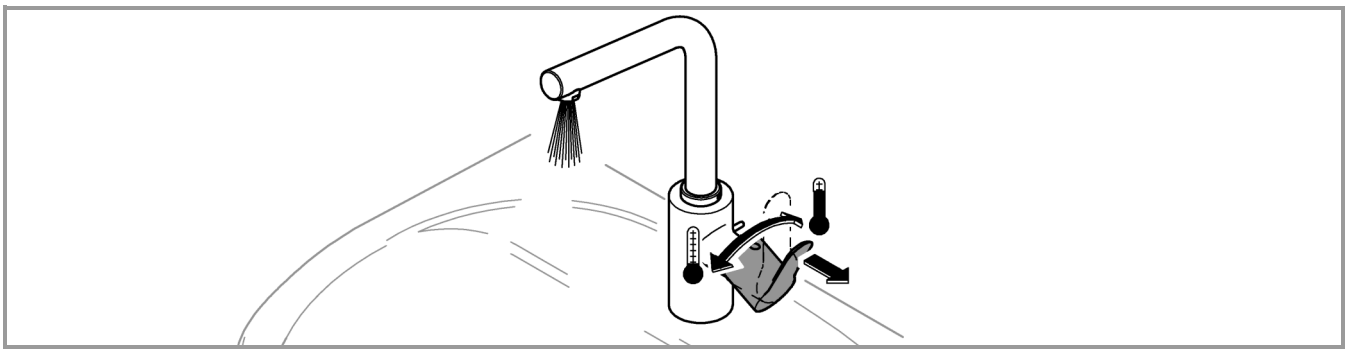

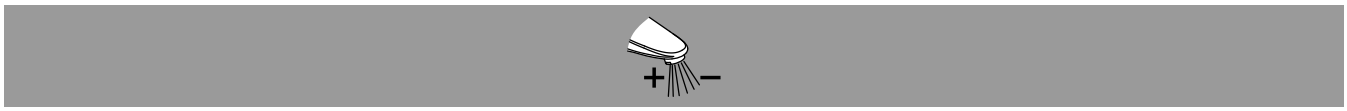
+
–

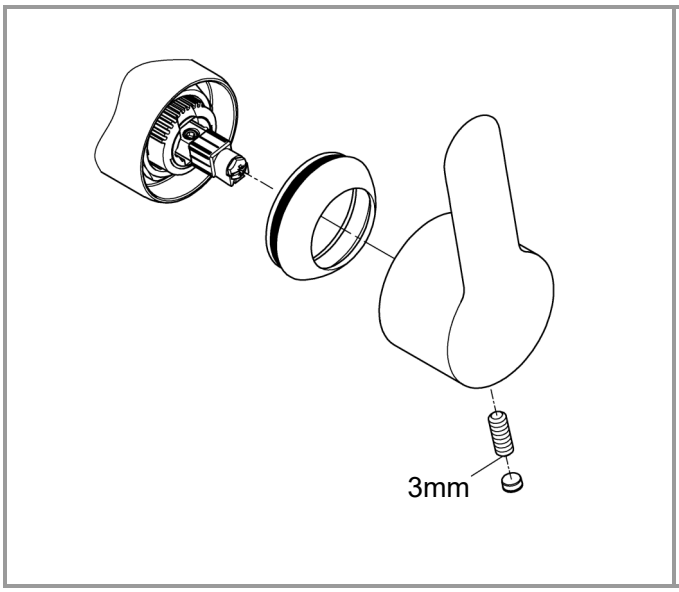
3mm

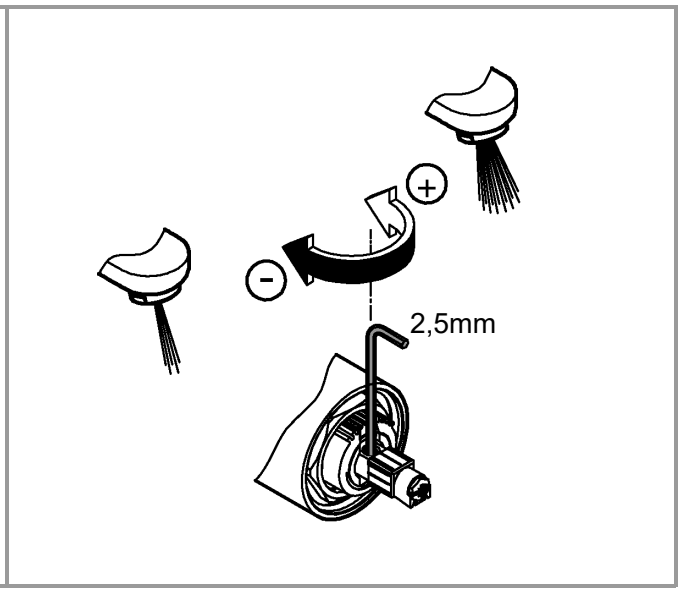
2,5mm

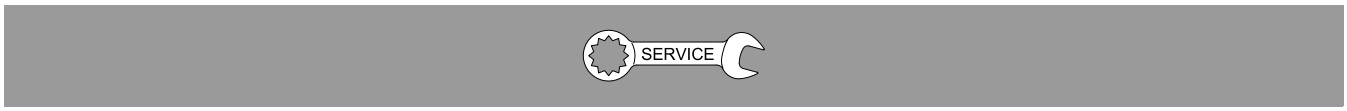
SERVICE

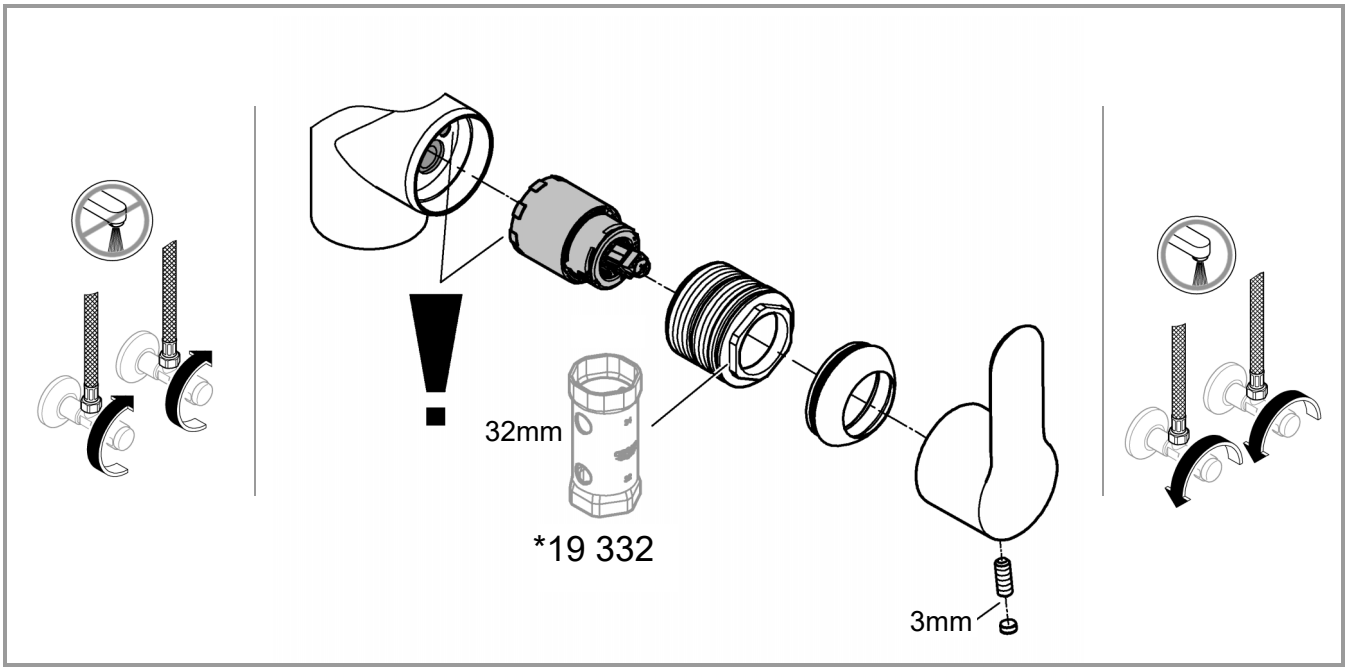
!
32mm
*19 332
3mm

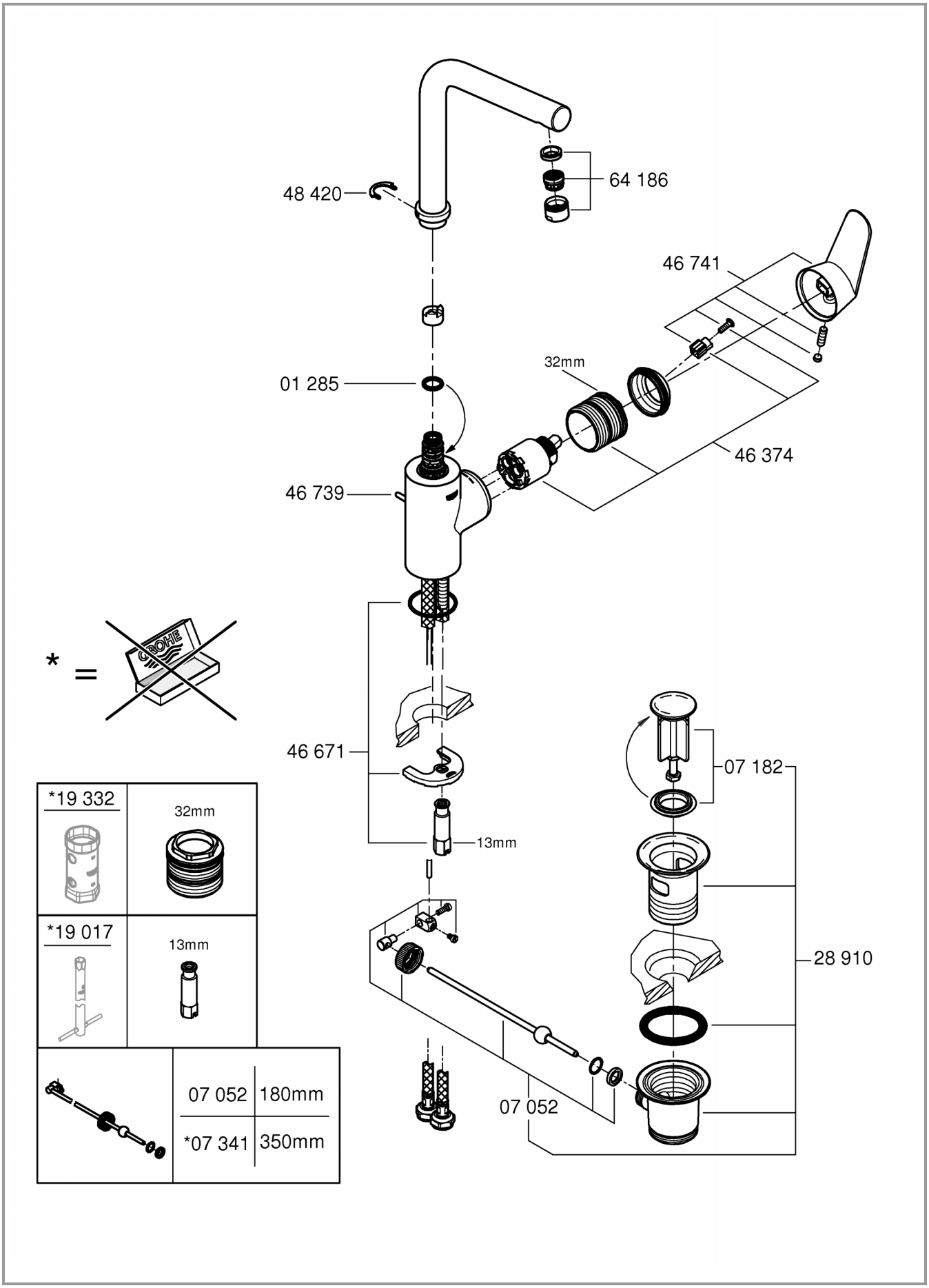
48 420
64 186
46 741
32mm
01 285
46 374
46 739
*
=
GROHE
46 671
07 182
13mm
28 910
07 052
*19 332
32mm
*19 017
13mm
07 052
180mm
*07 341
350mm

Pure Freude an Wasser

GROHE

D
✆ +49 571 39 89 333
service.de@grohe.com

A
✆ +43 1 6 80 60
info-at@grohe.com

AUS
✆ 1800 080 055
customer.care@reece.com.au

B
✆ +32 (0)2 899 3077
https://www.grohe.be/nl_be/onze-service/contact.html

BG
✆ +359 2 971 99 59
info-bg@grohe.com

BR
✆ 0800 770 1222
falecom@lixilamericas.com

CAU
✆ +99 412 497 09 74
info-az@grohe.com

CDN
✆ +1 888 6447643
info@grohe.ca

CH
✆ +41 44 877 73 00
info@grohe.ch

CN
✆ +86 4008811698
info.cn@grohe.com

CZ
✆ +420 277 004 193
info-cz@grohe.com

DK
✆ +45 44 65 68 00
grohe@grohe.dk

E
✆ +34 93 / 3 36 88 50
grohe@grohe.es

EST **LT** **LV**
✆ +372 661 6354
grohe@grohe.ee

F
✆ +33 1 49 97 29 00
sav-fr@grohe.com

FIN
✆ +358 (09)42451390
grohe@grohe.fi

GB
✆ +44 208 283 2840
info-uk@grohe.com

GR
✆ +302102712908
service-gr@grohe.com

H
✆ +36 (06)1 238-8045
info-hu@grohe.com

HK
✆ +852 2969 7067
info@grohe.hk

I
✆ +39 2 959401
info-it@grohe.com

IND
✆ 18001024475
customercare.in@grohe.com

IS
✆ +354 515 400
grohe@byko.is

J
✆ +81-3-5775-7500
info_grohe@blisspajapan.jp

KZ
✆ +7 775 007 05 27
service-kz@grohe.com

MAL
✆ 1800 80 6570
customerservice.my@lixil.com

MX
✆ 01 800 839 1200
info@lixilamericas.com

N
✆ +47 22 07 20 70
grohe@grohe.no

NL
✆ +31(0) 88-0030700
https://www.grohe.nl/nl_nl/onze-service/contact.html

NZ
✆ +64 09 573 0490
sales@robertson.co.nz

P
✆ +351 234529620
comercial-pt@grohe.com

PL
✆ +48 (22) 5432640
biuro@grohe.com

RI
✆ 0800-1-047-643
customercare-indonesia@lixil.com

RO
✆ +40 021 212 50 50
info-ro@grohe.com

ROK
✆ +82 2 1588 5903
info-singapore@grohe.com

RP
✆ +63 2 89288000
service_center@wilcon.com.ph

RUS
✆ 8 800 200 00 49
service-ru@grohe.com

S
✆ +46 771 14 13 14
grohe@grohe.se

SGP **RC**
✆ +65 6311 3611
grohe@connectcentre.sg

SK
✆ +421 948 119 343
info-sk@grohe.com

T
✆ +6629014455
grohe-thailand@lixil.com

TR **AZ** **TM** **TJ**
✆ +90 216 441 23 70
service.turkey@grohe.com

UA
✆ +380 (44) 5375273
info-ua@grohe.com

USA
✆ +1 800 4447643
Grohetechcare@lixil.com

VN
✆ (+84) 1800 6624
cskh@lixil.com

AL **BiH** **HR** **KS** **ME** **MK** **SLO** **SRB**
✆ +385 1 2911470
adria-hr@grohe.com

CY **MT** **IL**
✆ +357 22465200
service.cyprus@grohe.com

UAE **KWT** **BHR** **OM** **PK**
✆ +971 4 421 4556
service.UAE@grohe.com

KSA **LBN** **JOR** **IRQ** **QAT**
✆ +961 76868616
service.lebanon@grohe.com

EGY **SUD** **LBY**
✆ +202 26147988
service.egypt@grohe.com

MA **DZ** **TN** **NGR** **BJ** **GH** **CI** **SN**
✆ +202 26147988
service.morocco@grohe.com

Far East Area Sales Office:
✆ +65 6311 3600
info@grohe.com.sg

Latin America:
✆ +52 818 3050626
info@lixilamericas.com

www.grohe.com

2020/06/09